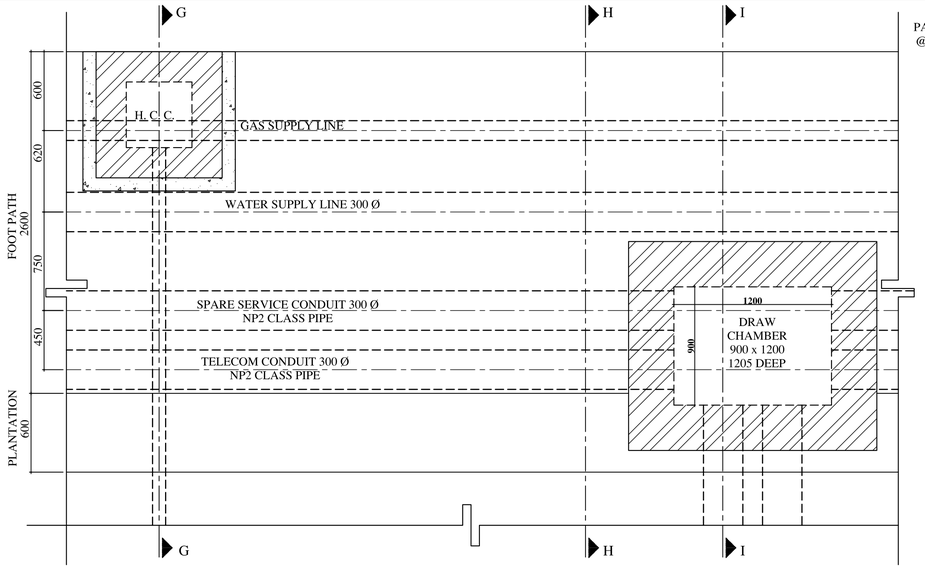

PART PLAN OF FOOTPATH
(SCALE - 1 : 25)

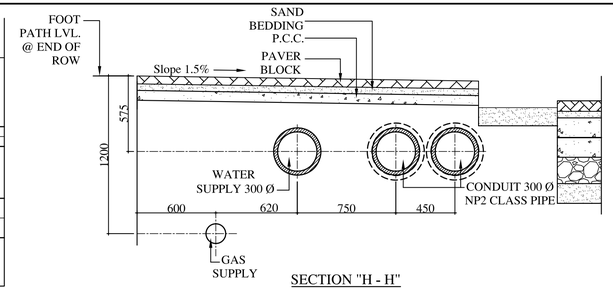

SECTION "H - H"
(SCALE - 1 : 25)

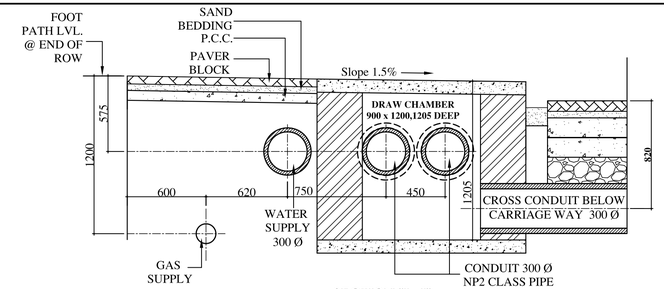

SECTION "I - I"
(SCALE - 1 : 25)

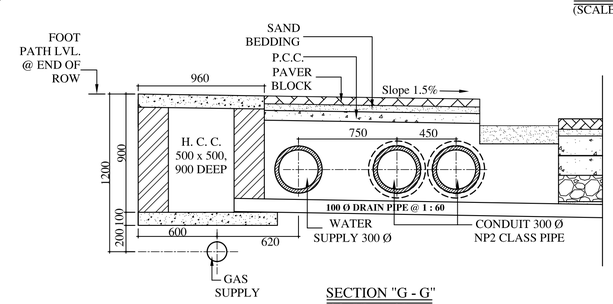

SECTION "G - G"
(SCALE - 1 : 25)

UNDERGROUND SERVICES BELOW 2.60 m WIDE FOOTPATH FOR R.O.W. OF 24.0 m

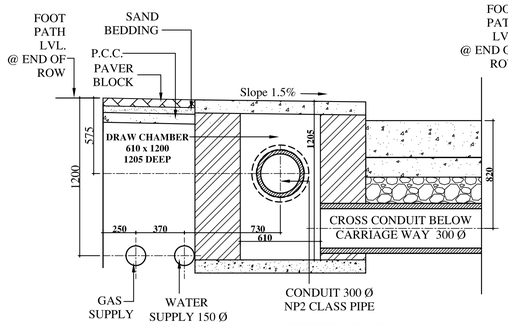

SECTION "B - B"
(SCALE - 1 : 25)

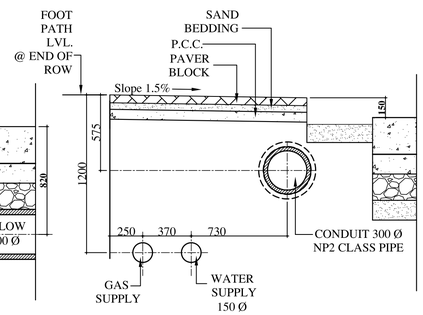

SECTION "C - C"
(SCALE - 1 : 25)

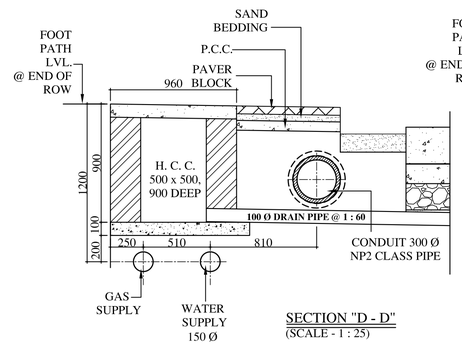

SECTION "D - D"
(SCALE - 1 : 25)

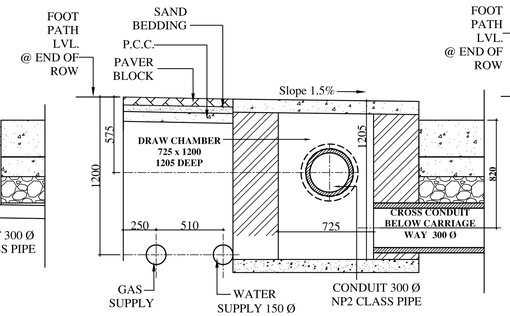

SECTION "E - E"
(SCALE - 1 : 25)

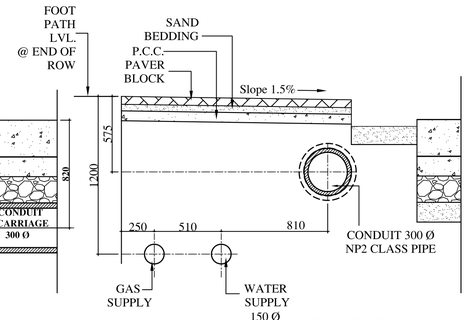

SECTION "F - F"
(SCALE - 1 : 25)

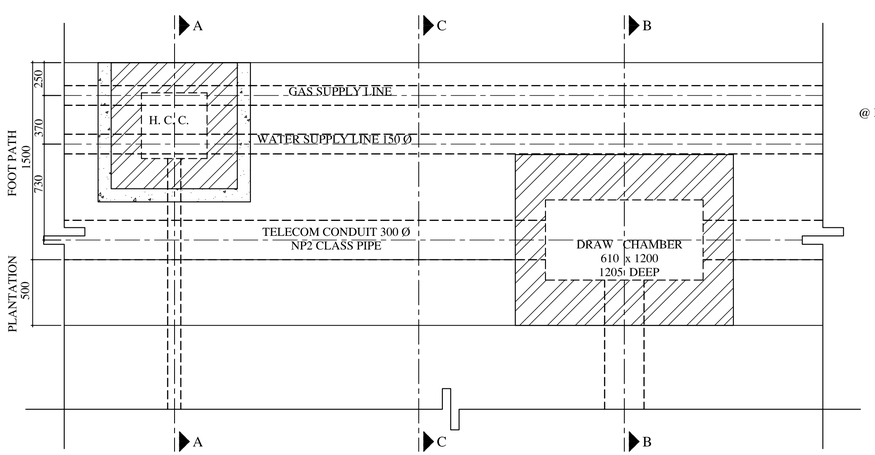

PART PLAN OF FOOTPATH
(SCALE - 1 : 25)

UNDERGROUND SERVICES BELOW 1.5 m WIDE FOOTPATH FOR R.O.W. OF 9.0 m

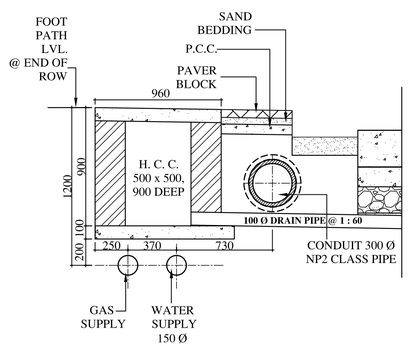

SECTION "A - A"
(SCALE - 1 : 25)

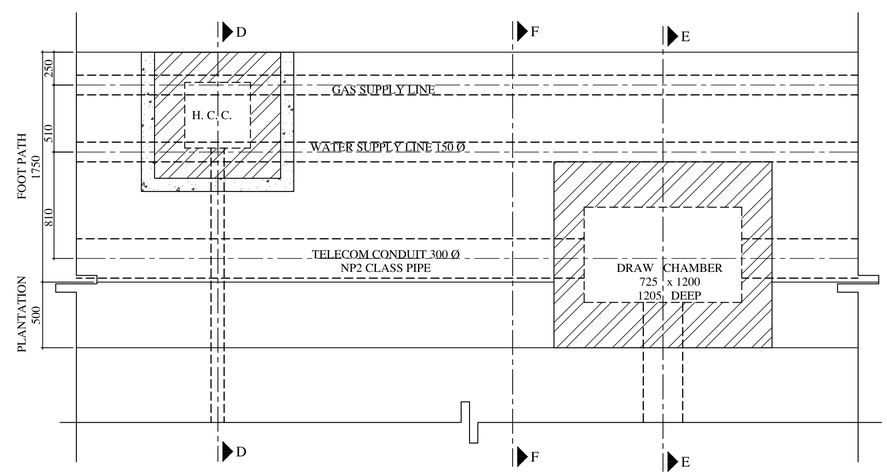

PART PLAN OF FOOTPATH
(SCALE - 1 : 25)

UNDERGROUND SERVICES BELOW 1.75 m WIDE FOOTPATH FOR R.O.W. OF 12.0 m

NOTES:-

1. ALL DIMENSIONS ARE IN mm
2. DIMENSIONS ARE TO BE READ AND NOT TO BE MEASURED
3. ALL SPECIFICATIONS SHALL BE AS PER TENDER DOCUMENTS
4. FEW OF THE COMPONENTS SHOWN ON THIS DRAWING MIGHT NOT BE COVERED UNDER SCOPE OF WORK FOR THE TENDER. FINAL SCOPE OF WORK SHALL BE AS DEFINED IN THE TENDER DOCUMENTS.
5. THIS DRAWING IS FOR SPECIFIC PURPOSE OF DEFINING LAYOUT OF UNDERGROUND SERVICES ONLY. EXECUTION OF ANY OTHER COMPONENTS, LIKE H.C.C, DRAW CHAMBER, FOOTH PATH, CARRIAGE WAY ETC. , IS NOT TO BE DONE FOLLOWING DIMENSIONS/SPECIFICATIONS AS PER THIS DRAWING AND THE SAME SHALL BE CARRIED OUT AS PER RELEVANT DRAWINGS FOR THOSE COMPONENTS.

REV. NO.	REV. DATE	REVISION DETAILS	APPD. BY

	NAME	SIGN	DATE
DRAWN BY:-			
CHECKED BY:-			
APPROVED BY:-			

PRINCIPAL CLIENT :-

PROJECT TITLE:-

DRG. NO.

DRAWING TITLE:-
DETAILS FOR UNDERGROUND SERVICES (REV-6)

LAKHLANI ASSOCIATES
CIVIL AND STRUCTURAL ENGINEERS
SHREE SOCIETY MAIN ROAD
Nr. SURYAMUKHI HANUMAN TEMPLE
NANA MAVA MAIN ROAD
NEXT TO VIVEKANAND SCHOOL
RAJKOT - 360 001
PHONE : +91 281 247 51 60
E-mail : contact@lakhlani.com
Web : www.lakhlani.com